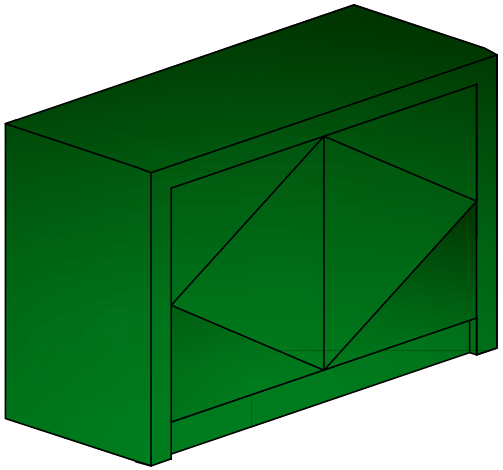

3D VIEW PR7

3 WALL 3 ELEVATION

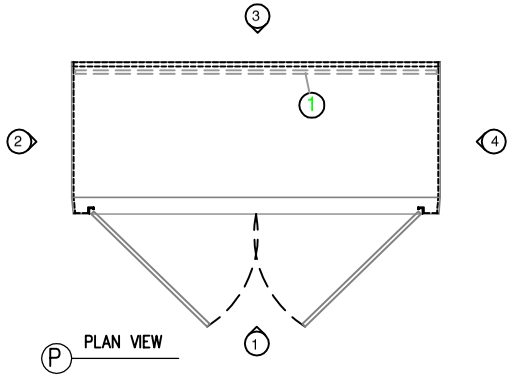

P PLAN VIEW

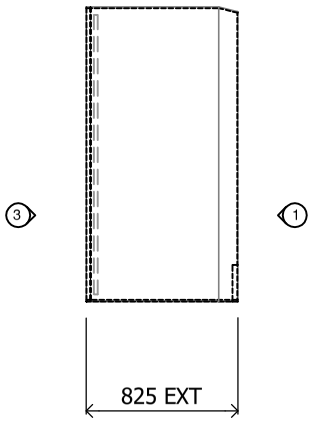

2 WALL 2 ELEVATION

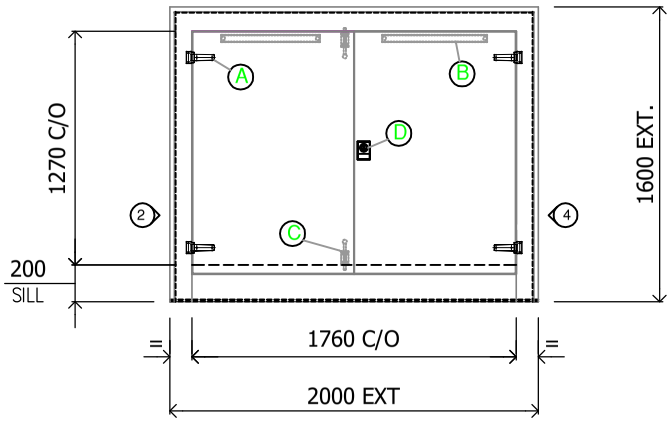

1 WALL 1 ELEVATION

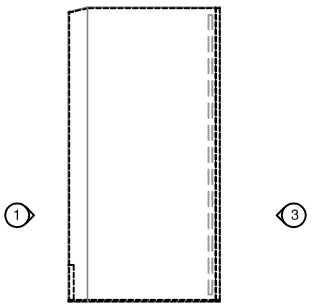

4 WALL 4 ELEVATION

CONSTRUCTION DETAILS

CONSTRUCTION: GRP COMPOSITE
EXTERNAL FINISH: SATIN GELCOAT
EXTERNAL COLOUR:
INTERNAL FINISH: WHITE GRP

PARTS LIST

ITEM	QTY	
A	4	STAINLESS STEEL HINGES
B	2	AUTOMATIC HOLD OPEN STAYS
C	2	INTERNAL SPRING BOLTS
D	1	SUITABLE LOCKING FACILITY

BOARDS & PADS LIST

ITEM	QTY	
1	1	FULL SIZE x 18mm SURFACE TREATED PLY BOARD

PLAN VIEW OF BASE

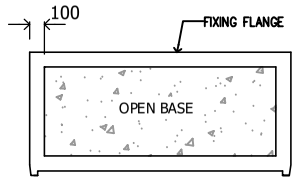

DRAWING REVISIONS & MODIFICATIONS

REV	REVISION DESCRIPTION	DRAWN	DATE

MOD	MODIFICATION DESCRIPTION	DRAWN	DATE

NOTES

1. Do not scale from this drawing
2. All dimensions to be checked on site
3. Dimensions in millimeters unless otherwise noted
4. All views are external unless otherwise noted
5. Encapsulated pads used from waste

This drawing and design is the property of QUINSHIELD LTD, and without the written consent of QUINSHIELD LTD may not be copied in whole or in part or communicated to a third party or used for any other purpose.

Third Angle Projection

Scale: NTS

Original Drawing size:- A2

IF IN DOUBT ASK

KEY TO DRAWING ITEMS

DRAWING NUMBER KEY
SHEET NUMBER

KEY TO SECTION LINES
LETTER ON RELEVANT SHEET WHERE SECTION IS SHOWN
ARROW POINT IN THE VIEW DIRECTION
DRAWING NUMBER KEY

KEY TO ELEVATION
ELEVATION 1
ELEVATION NUMBER

QUINSHIELD LTD.
G.R.P INDUSTRIAL HOUSINGS
CAPEL HENDRE
AMMANFORD
CARMARTHENSHIRE
tel:(01269) 832220
fax:(01269) 832221
email: enquiries@quinshield.com
Website: www.quinshield.com

CLIENT

DRAWING TITLE

DIMENSIONS:-
PR7 CABINET
REF:-

DRAWING No.	.
REVISION No.	0

DRAWING DETAILS

DRAWN: MD	DATE: .
CHECKED:	DATE:
JOB NUMBER	.
CUSTOMER ORDER No.	.
QUOTE REFERENCE	.
SHEET No.	01/01